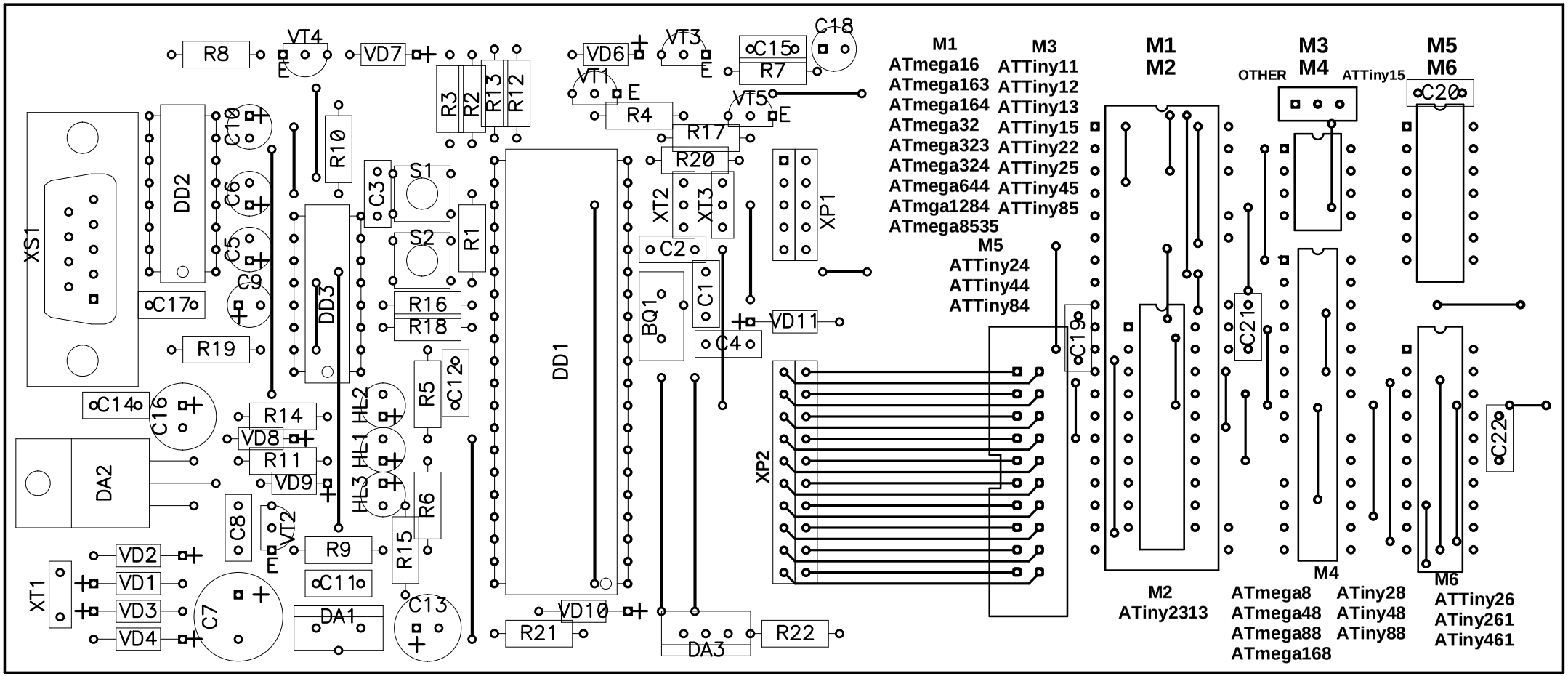
XS1
DD2
DD3
DD1
DA2
DA1
DA3
XT1
XT2
XT3
XP1
XP2
BQ1
R8
R10
R9
R11
R14
R19
R16
R18
R5
R6
R15
R3
R2
R13
R12
R4
R17
R20
R7
R1
R21
R22
C1
C2
C3
C4
C5
C6
C7
C8
C9
C10
C11
C12
C13
C14
C15
C16
C17
C18
C19
C20
C21
C22
VD1
VD2
VD3
VD4
VD6
VD7
VD8
VD9
VD10
VD11
VT1
VT2
VT3
VT4
VT5
HL1
HL2
HL3
S1
S2
M1
ATmega16
ATmega163
ATmega164
ATmega32
ATmega323
ATmega324
ATmega644
ATmga1284
ATmega8535
M3
ATTiny11
ATTiny12
ATTiny13
ATTiny15
ATTiny22
ATTiny25
ATTiny45
ATTiny85
M5
ATTiny24
ATTiny44
ATTiny84
M1
M2
M2
ATiny2313
M3
M4
OTHER
ATTiny15
M4
ATmega8
ATmega48
ATmega88
ATmega168
ATiny28
ATiny48
ATiny88
M5
M6
M6
ATTiny26
ATiny261
ATiny461